Icaria is a monobloc concrete planter with a large internal volume that makes it possible to plant trees or shrubs of an average height. The texture on all four sides includes a subtle bas-relief formed by vertical lines framed by classic panels. Its functionality, powerful resistance and the right economization of material make this simple planter one of the longest running products in the *Escofet* collection.

Concrete | 116 cm | 925 kg | 750 L

Update 04.08.2020

ICARIA

Esteve Bonell 1991

escofet®

Origin

Icaria **was designed in 1991 by the architect Esteve Bonell in conjunction with *Escofet* as a garden element in the walkway that leads to the houses in a housing block of the Olympic Village in Barcelona.**

Functionality

Its cubic geometry lends strength to its structure, allowing it to be moved even when filled with soil, without affecting the plants that grow inside it.

Material

Monomaterial body of concrete reinforced with stainless steel. Etched, water-repellent finish. Supplied in the *Escofet* standard chart colours.

Installation

Self-standing for installation directly on the paving on the four support legs built into the concrete volume, with no need for anchors.

ICARIA

fscofet®

1. Planter

Icaria			
Dimensions		116 x 116 x 90 cm	
Weight		925 kg	
Capacity		750 L	
1.1 General features			
Material	Reinforced concrete	**Fixing**	Free-standing
Finish	Etched and waterproofed		
Colours			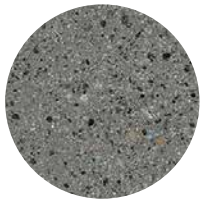
	GR. Grey	**BL.** White	**CA.** CA Grey
	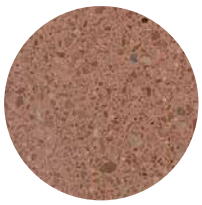	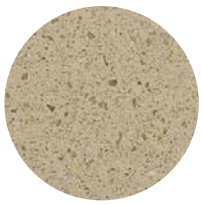	
	RA. Red	**BG.** Beige	

1.2 Installation system

Hoisting
(W= 925 kg)

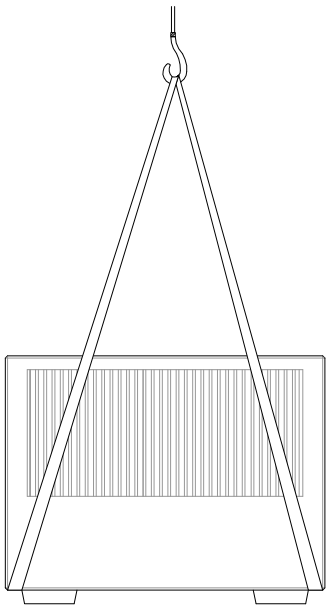

ICARIA

Escofet®

Icaria

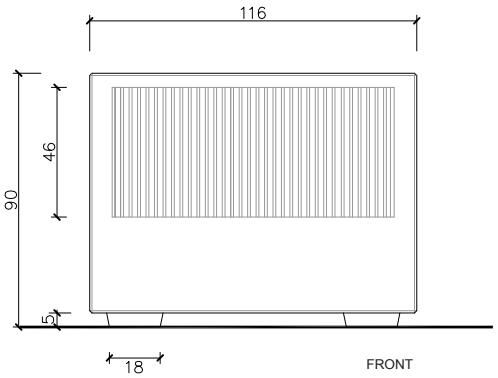

FRONT

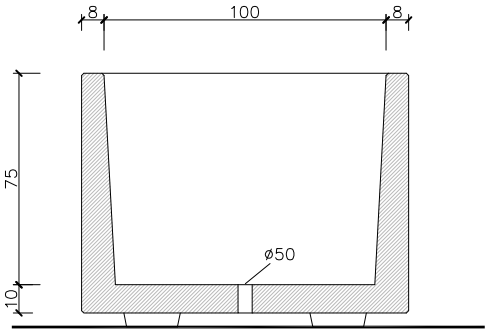

SIDE

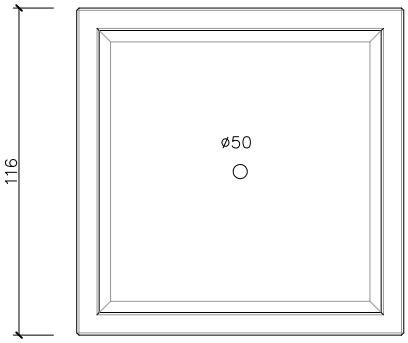

TOP

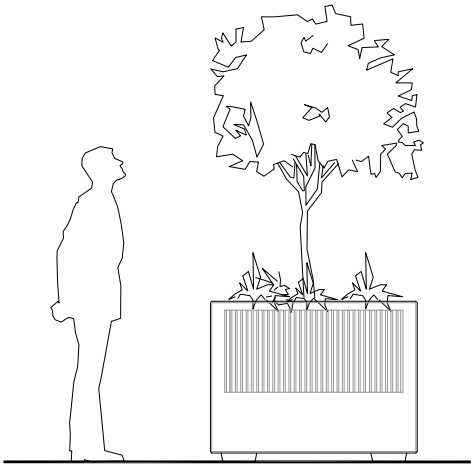

Warranty

5 years in all its components.

The names, trademarks and industrial models of the products have been logged in the corresponding registers. The technical information provided by Escofet about its products can be modified without prior notice.

Escofet 1886 S.A
Head office and production

Montserrat, 162
E 08760 Martorell
Barcelona - España
T. 0034 937 737 150
F. 0034 937 737 151

info@escofet.com
www.escofet.com

GA-2005/0072 SST-0090/2010 ER-0403/2016

ICARIA

escofet®